DocuSign Envelope ID: F20DA70D-AC83-4BF5-AE9D-2BD4C4EF895E

4/3/2018 2:03:55 PM G:\Projects\2016\Division 5 (Mott Macdonald)\B-5687 Warren #43 (60 212421CS VCBR)\Structures\Drawings\Final\401_B5687_SMU_bent1.dgn

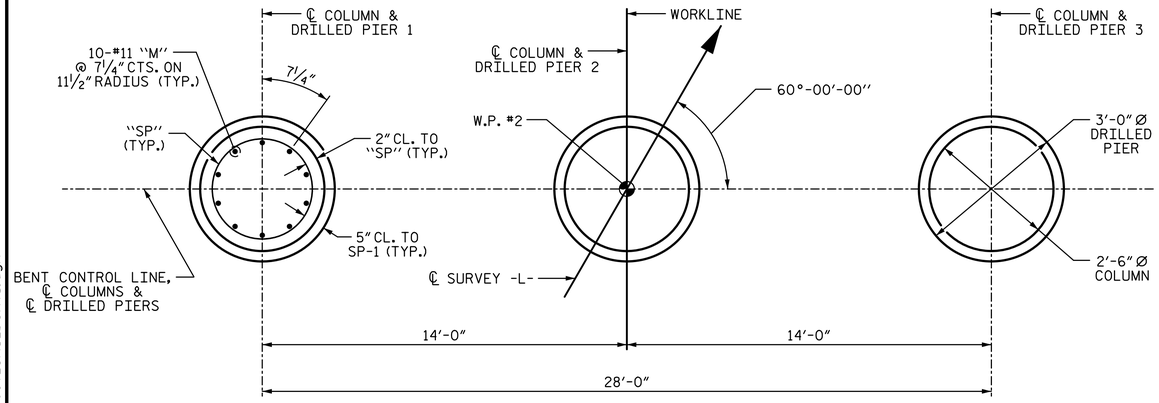

PLAN OF DRILLED PIERS & COLUMNS

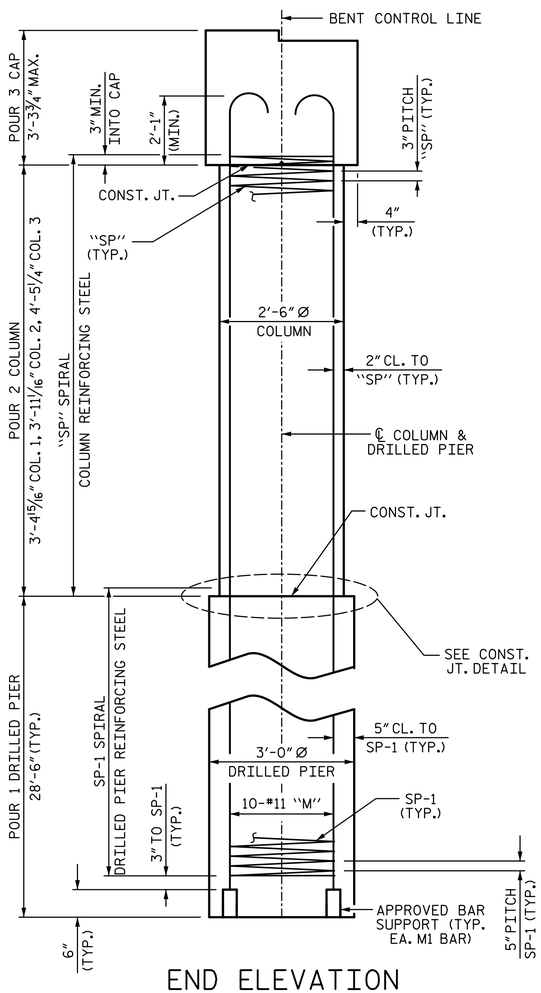

END ELEVATION

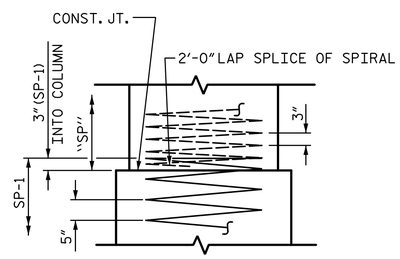

CONSTRUCTION JOINT DETAIL

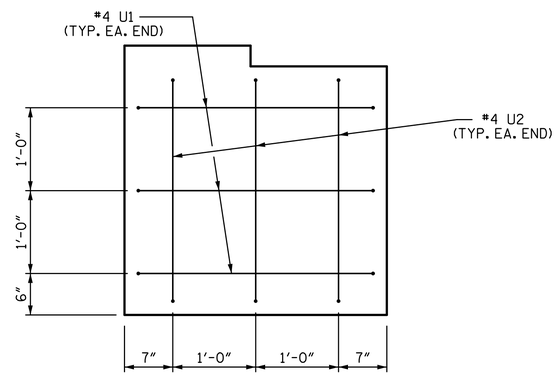

END OF CAP VIEW

(TYPICAL BOTH ENDS)

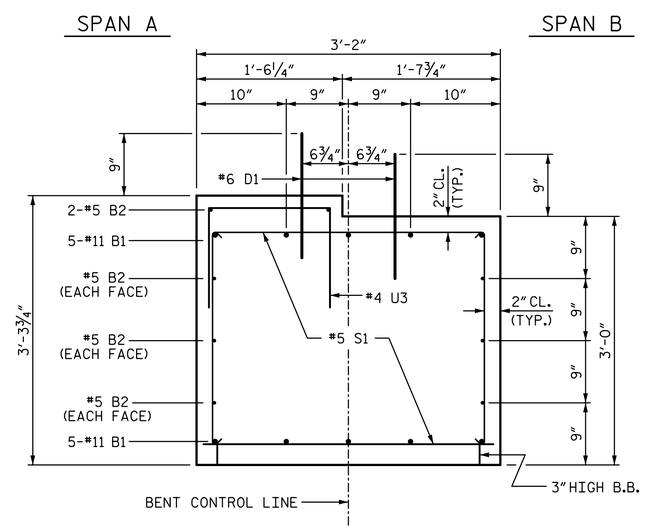

SECTION THRU CAP

BAR TYPES

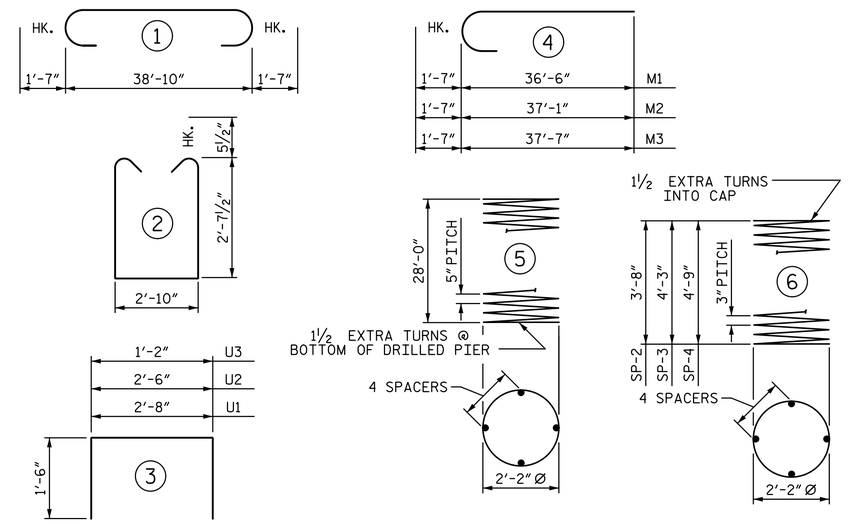

ALL BAR DIMENSIONS ARE OUT TO OUT

BILL OF MATERIAL

BENT 1

BAR	NO.	SIZE	TYPE	LENGTH	WEIGHT
B1	10	#11	STR	42'-0"	2231
B2	8	#5	STR	39'-0"	325
D1	40	#6	STR	1'-6"	90
M1	10	#11	4	38'-1"	2023
M2	10	#11	4	38'-8"	2054
M3	10	#11	4	39'-2"	2081
S1	68	#5	2	9'-0"	638
U1	6	#4	3	5'-8"	23
U2	6	#4	3	5'-6"	22
U3	39	#4	3	4'-2"	109

REINFORCING STEEL					9596 LB
SP-1	3	*	5	459'-4"	1437
SP-2	1	**	6	113'-7"	76
SP-3	1	**	6	127'-0"	85
SP-4	1	**	6	140'-4"	94

SPIRAL COLUMN REINFORCING STEEL 1692 LB

* THE SP-1 SPIRAL REINFORCING STEEL SHALL BE W31 OR D-31 COLD DRAWN WIRE OR #5 PLAIN OR DEFORMED BAR

** THE SP-2, SP-3, SP-4 SPIRAL REINFORCING STEEL SHALL BE W20 OR D-20 COLD DRAWN WIRE OR #4 PLAIN OR DEFORMED BAR

CLASS A CONCRETE BREAKDOWN

POUR 2 (COLUMNS)	2.1 CY
POUR 3 (CAP)	14.8 CY
TOTAL CLASS A CONCRETE	16.9 CY

DRILLED PIERS:

DRILLED PIER CONCRETE POUR 1 (DRILLED PIERS)	22.4 CY
3'-0" Ø DRILLED PIER NOT IN SOIL	30.0 LF
3'-0" Ø DRILLED PIER IN SOIL	55.5 LF
PERMANENT STEEL CASING FOR 3'-0" Ø DRILLED PIER	48.6 LF
CSL TUBES	360.0 LF

PROJECT NO. B-5687

WARREN COUNTY

STATION: 14+96.00 -L-

SHEET 2 OF 2

STATE OF NORTH CAROLINA
DEPARTMENT OF TRANSPORTATION
RALEIGH

SUBSTRUCTURE

BENT 1

PLANS PREPARED BY:

SIMPSON ENGINEERS & ASSOCIATES
5640 Dillard Drive
Suite 200
Cary, NC 27518
(919) 852-0468
(919) 852-0598 (Fax)
www.simpsonengr.com
LICENSURE NO. C-2521

NORTH CAROLINA PROFESSIONAL SEAL 11268 ENGINEER BETSY S. COX
4/3/2018

DOCUMENT NOT CONSIDERED FINAL UNLESS ALL SIGNATURES COMPLETED

DRAWN BY:	S.D. COOPER	DATE:	4-18		
CHECKED BY:	B.S. COX	DATE:	4-18		
DESIGN ENGINEER OF RECORD:	B.S. COX	DATE:	4-18		

REVISIONS						SHEET NO.
NO.	BY:	DATE:	NO.	BY:	DATE:	S-19
1			3			TOTAL SHEETS
2			4			24