DocuSign Envelope ID: F20DA70D-AC83-4BF5-AE9D-2BD4C4EF895E

4/3/2018 2:03:53 PM G:\Projects\2016\Division 5 (Mott Macdonald)\B-5687 Warren #43 (60 212421CS VCBR)\Structures\Drawings\Final\401_B5687_SMU_super.dgn

## BAR TYPES

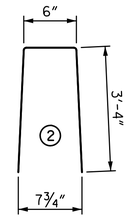


ALL BAR DIMENSIONS ARE OUT TO OUT

## BILL OF MATERIAL FOR VERTICAL CONCRETE BARRIER RAIL

| BAR | BARS PER PAIR OF EXTERIOR UNITS | TOTAL NO. | SIZE | TYPE | LENGTH | WEIGHT |
|---|---|---|---|---|---|---|
| | 25' UNIT | | | | | |
| ✱ B8 | 20 | 20 | #5 | STR | 24'-6" | 511 |
| ✱ S4 | 68 | 68 | #5 | 2 | 7'-2" | 508 |
| ✱ EPOXY COATED REINFORCING STEEL | | | | LB | | 1019 |
| CLASS AA CONCRETE | | | | CY | | 6.4 |
| TOTAL VERTICAL CONCRETE BARRIER RAIL | | | | LF | | 50.29 |

## BILL OF MATERIAL FOR VERTICAL CONCRETE BARRIER RAIL

| BAR | BARS PER PAIR OF EXTERIOR UNITS | TOTAL NO. | SIZE | TYPE | LENGTH | WEIGHT |
|---|---|---|---|---|---|---|
| | 35' UNIT | | | | | |
| ✱B10 | 80 | 80 | #5 | STR | 10'-5" | 869 |
| ✱ S4 | 88 | 88 | #5 | 2 | 7'-2" | 658 |
| ✱ EPOXY COATED REINFORCING STEEL | | | | LB | | 1527 |
| CLASS AA CONCRETE | | | | CY | | 9.0 |
| TOTAL VERTICAL CONCRETE BARRIER RAIL | | | | LF | | 70.29 |

## BILL OF MATERIAL FOR VERTICAL CONCRETE BARRIER RAIL

| BAR | BARS PER PAIR OF EXTERIOR UNITS | TOTAL NO. | SIZE | TYPE | LENGTH | WEIGHT |
|---|---|---|---|---|---|---|
| | 75' UNIT | | | | | |
| ✱B25 | 120 | 120 | #5 | STR | 14'-3" | 1784 |
| ✱ S4 | 168 | 168 | #5 | 2 | 7'-2" | 1256 |
| ✱ EPOXY COATED REINFORCING STEEL | | | | LB | | 3040 |
| CLASS AA CONCRETE | | | | CY | | 19.4 |
| TOTAL VERTICAL CONCRETE BARRIER RAIL | | | | LF | | 150.29 |

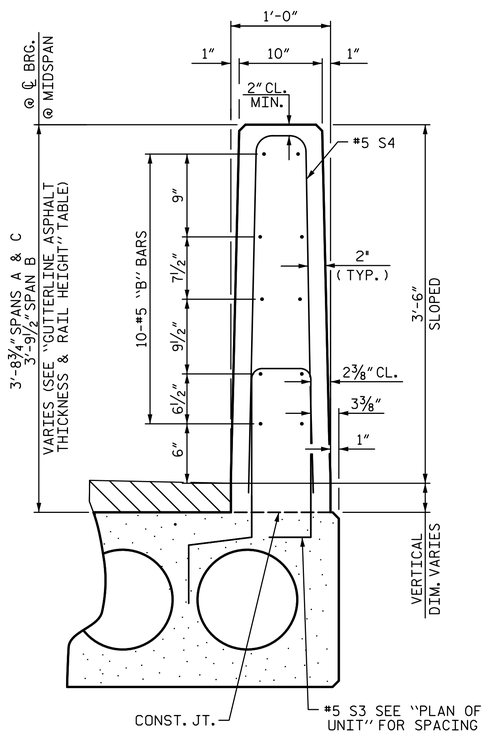


SECTION THRU RAIL

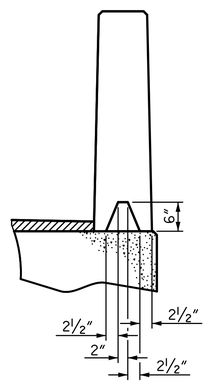


SECTION S-S

AT DAM IN OPEN JOINT
(THIS IS TO BE USED ONLY WHEN SLIP FORM IS USED)

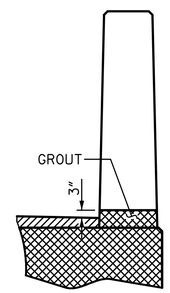


SECTION T-T

AT OPEN JOINT AT BENT
(THIS IS TO BE USED WHERE FOAM JOINT IS NOT USED)

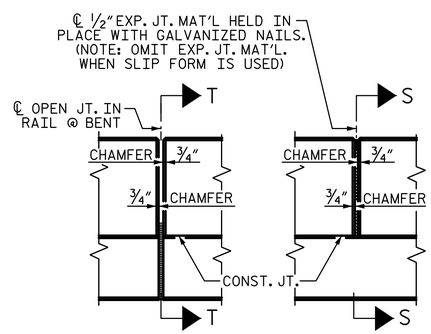


ELEVATION AT EXPANSION JOINTS

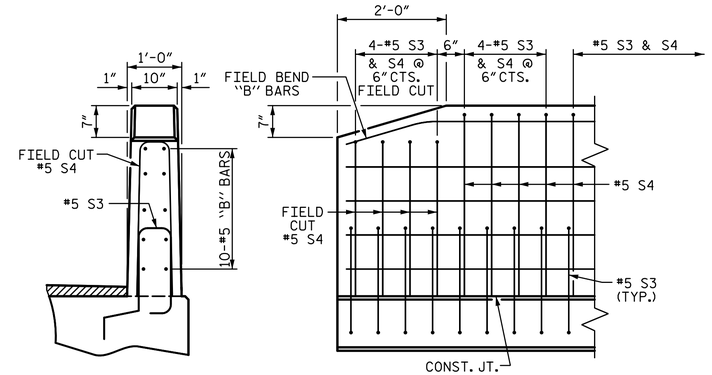


END VIEW

SIDE VIEW

END OF RAIL DETAILS

# VERTICAL CONCRETE BARRIER RAIL DETAILS

PROJECT NO. B-5687

WARREN COUNTY

STATION: 14+96.00 -L-

SHEET 7 OF 7

STATE OF NORTH CAROLINA
DEPARTMENT OF TRANSPORTATION
RALEIGH

SUPERSTRUCTURE
3'-0" X 1'-9" &
3'-0" X 2'-0"
PRESTRESSED CONCRETE
CORED SLAB UNITS
60° SKEW

PLANS PREPARED BY:

SIMPSON ENGINEERS & ASSOCIATES
5640 Dillard Drive
Suite 200
Cary, NC 27518
(919) 852-0468
(919) 852-0598 (Fax)
www.simpsonengr.com
LICENSURE NO. C-2521

NORTH CAROLINA PROFESSIONAL SEAL 11268 ENGINEER BETSY S. COX
4/3/2018

DOCUMENT NOT CONSIDERED FINAL UNLESS ALL SIGNATURES COMPLETED

| REVISIONS | | | | | | SHEET NO. |
|---|---|---|---|---|---|---|
| NO. | BY: | DATE: | NO. | BY: | DATE: | S-12 |
| 1 | | | 3 | | | TOTAL SHEETS |
| 2 | | | 4 | | | 24 |

DRAWN BY: S.D. COOPER DATE: 4-18
CHECKED BY: B.S. COX DATE: 4-18
DESIGN ENGINEER OF RECORD: B.S. COX DATE: 4-18