DocuSign Envelope ID: F20DA70D-AC83-4BF5-AE9D-2BD4C4EF895E

4/3/2018 2:03:52 PM G:\Projects\2016\Division 5 (Mott Macdonald)\B-5687 Warren #43 (60 212421CS VCBR)\Structures\Drawings\Final\401_B5687_SMU_super.dgn

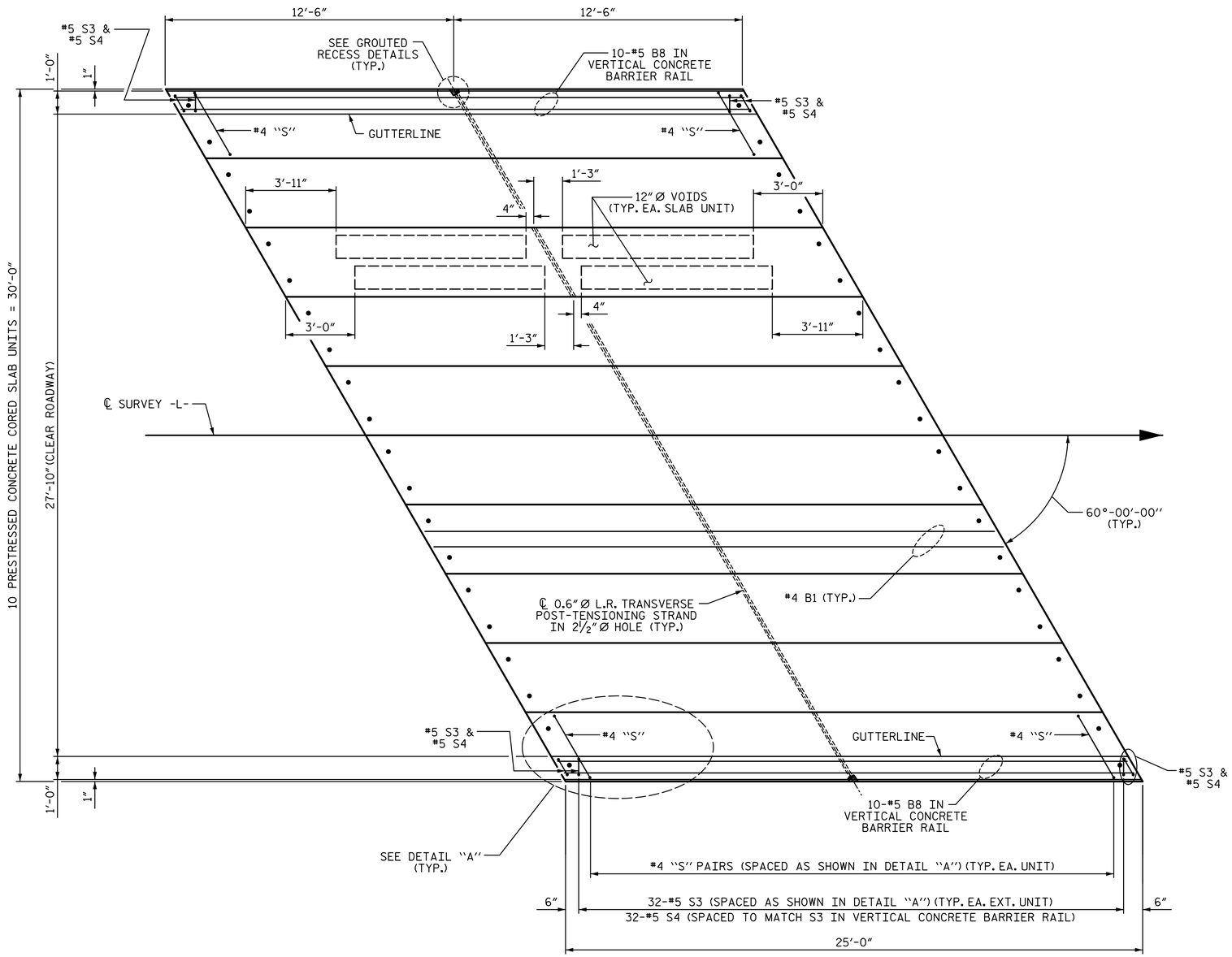

PLAN OF SPAN C

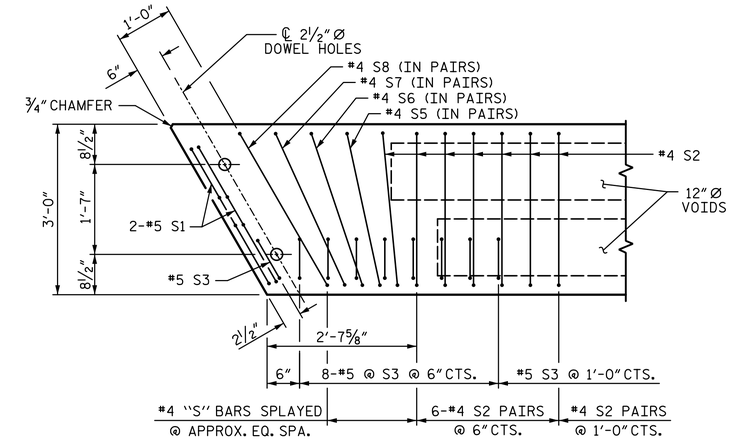

DETAIL "A"

(SIMILAR EACH END OF UNIT)
NOTE: EXTERIOR UNIT SHOWN - INTERIOR UNIT SIMILAR EXCEPT OMIT #5 S3 BARS.

PROJECT NO. B-5687
WARREN COUNTY
STATION: 14+96.00 -L-

SHEET 5 OF 7

STATE OF NORTH CAROLINA
DEPARTMENT OF TRANSPORTATION
RALEIGH
SUPERSTRUCTURE
PLAN OF SPAN C
(25'-0" UNIT)
27'-10" CLEAR ROADWAY
60° SKEW

PLANS PREPARED BY:
SIMPSON ENGINEERS & ASSOCIATES
5640 Dillard Drive
Suite 200
Cary, NC 27518
(919) 852-0468
(919) 852-0598 (Fax)
www.simpsonengr.com
LICENSURE NO. C-2521

NORTH CAROLINA PROFESSIONAL SEAL 11268 ENGINEER BETSY S. COX
4/3/2018

DOCUMENT NOT CONSIDERED FINAL
UNLESS ALL SIGNATURES COMPLETED

REVISIONS						SHEET NO.
NO.	BY:	DATE:	NO.	BY:	DATE:	S-10
1			3			TOTAL SHEETS
2			4			24

DRAWN BY:	S.D. COOPER	DATE:	4-18
CHECKED BY:	B.S. COX	DATE:	4-18
DESIGN ENGINEER OF RECORD:	B.S. COX	DATE:	4-18