DocuSign Envelope ID: F20DA70D-AC83-4BF5-AE9D-2BD4C4EF895E

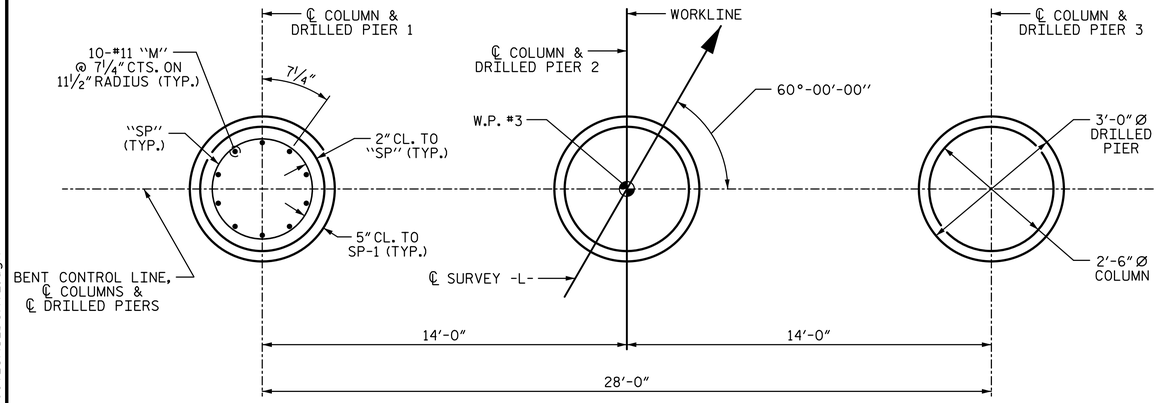

PLAN OF DRILLED PIERS & COLUMNS

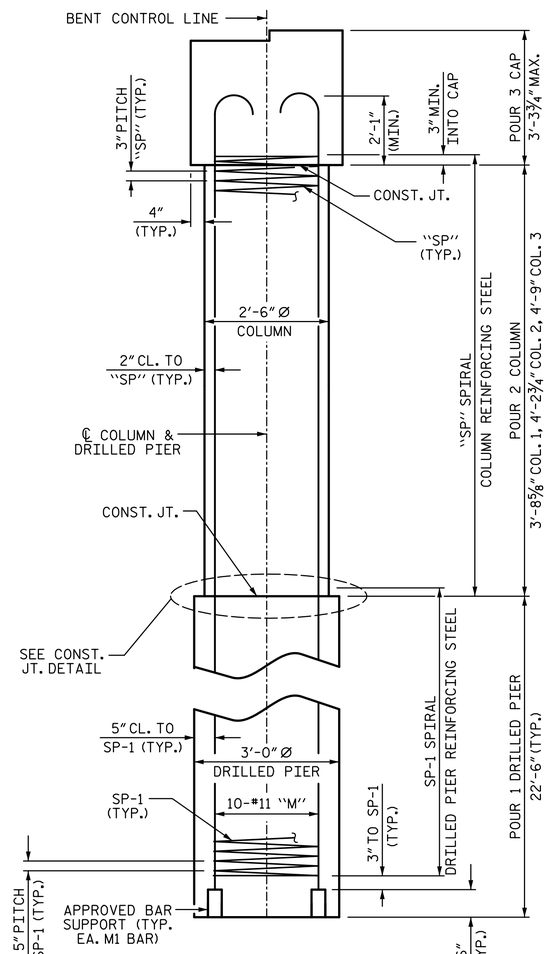

END ELEVATION

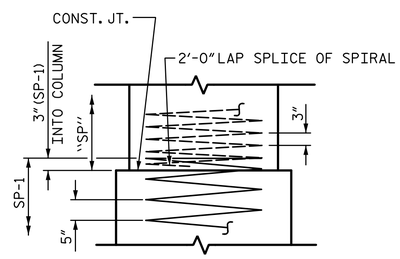

CONSTRUCTION JOINT DETAIL

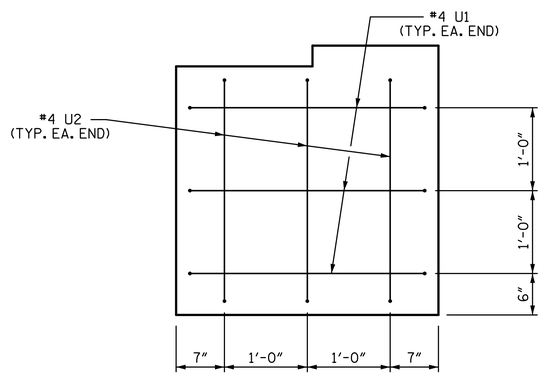

END OF CAP VIEW

(TYPICAL BOTH ENDS)

BAR TYPES

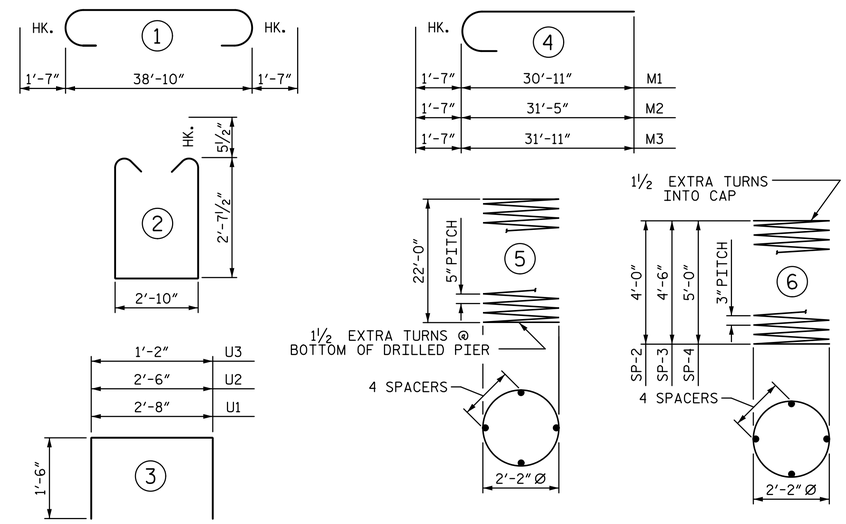

ALL BAR DIMENSIONS ARE OUT TO OUT

BILL OF MATERIAL

BENT 2

BAR	NO.	SIZE	TYPE	LENGTH	WEIGHT
B1	10	#11	STR	42'-0"	2231
B2	8	#5	STR	39'-0"	325
D1	40	#6	STR	1'-6"	90
M1	10	#11	4	32'-6"	1727
M2	10	#11	4	33'-0"	1753
M3	10	#11	4	33'-6"	1780
S1	68	#5	2	9'-0"	638
U1	6	#4	3	5'-8"	23
U2	6	#4	3	5'-6"	22
U3	39	#4	3	4'-2"	109

REINFORCING STEEL					8698 LB
SP-1	3	✳	5	366'-2"	1146
SP-2	1	✳✳	6	120'-3"	80
SP-3	1	✳✳	6	133'-8"	89
SP-4	1	✳✳	6	147'-0"	98
SPIRAL COLUMN REINFORCING STEEL					1413 LB

✳ THE SP-1 SPIRAL REINFORCING STEEL SHALL BE W31 OR D-31 COLD DRAWN WIRE OR #5 PLAIN OR DEFORMED BAR

✳✳ THE SP-2, SP-3, SP-4 SPIRAL REINFORCING STEEL SHALL BE W20 OR D-20 COLD DRAWN WIRE OR #4 PLAIN OR DEFORMED BAR

CLASS A CONCRETE BREAKDOWN	
POUR 2 (COLUMNS)	2.3 CY
POUR 3 (CAP)	14.8 CY
TOTAL CLASS A CONCRETE	17.1 CY

DRILLED PIERS:	
DRILLED PIER CONCRETE POUR 1 (DRILLED PIERS)	17.7 CY
3'-0" Ø DRILLED PIER NOT IN SOIL	30 LF
3'-0" Ø DRILLED PIER IN SOIL	37.5 LF
PERMANENT STEEL CASING FOR 3'-0" Ø DRILLED PIER	27.6 LF
CSL TUBES	288.0 LF

SPAN B

SPAN C

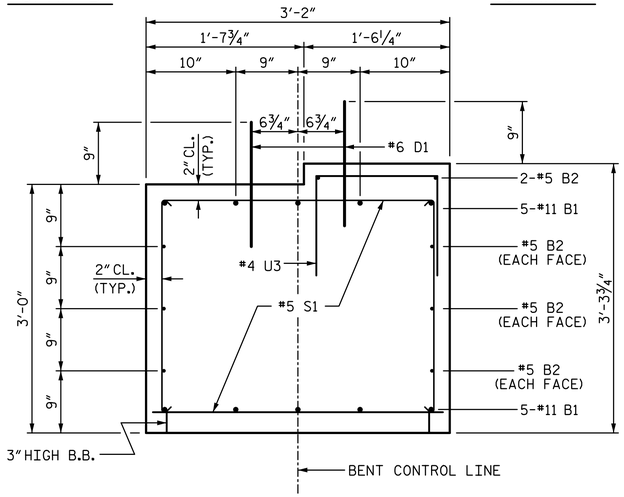

SECTION THRU CAP

PROJECT NO. B-5687

WARREN COUNTY

STATION: 14+96.00 -L-

SHEET 2 OF 2

STATE OF NORTH CAROLINA
DEPARTMENT OF TRANSPORTATION
RALEIGH

SUBSTRUCTURE

BENT 2

PLANS PREPARED BY:

SIMPSON ENGINEERS & ASSOCIATES
5640 Dillard Drive
Suite 200
Cary, NC 27518
(919) 852-0468
(919) 852-0598 (Fax)
www.simpsonengr.com
LICENSURE NO. C-2521

NORTH CAROLINA PROFESSIONAL SEAL 11268 ENGINEER BETSY S. COX
4/3/2018

DRAWN BY: S.D. COOPER DATE: 4-18
CHECKED BY: B.S. COX DATE: 4-18
DESIGN ENGINEER OF RECORD: B.S. COX DATE: 4-18

DOCUMENT NOT CONSIDERED FINAL UNLESS ALL SIGNATURES COMPLETED

REVISIONS						
NO.	BY:	DATE:	NO.	BY:	DATE:	
1			3			
2			4			

SHEET NO. S-21

TOTAL SHEETS 24

4/3/2018 2:03:56 PM G:\Projects\2016\Division 5 (Mott Macdonald)\B-5687 Warren #43 (60 212421CS VCBR)\Structures\Drawings\Final\401_B5687_SMU_bent2.dgn