DocuSign Envelope ID: F20DA70D-AC83-4BF5-AE9D-2BD4C4EF895E

4/3/2018 2:03:56 PM G:\Projects\2016\Division 5 (Mott Macdonald)\B-5687 Warren #43 (60 212421CS VCBR)\Structures\Drawings\Final\401_B5687_SMU_rr.dgn

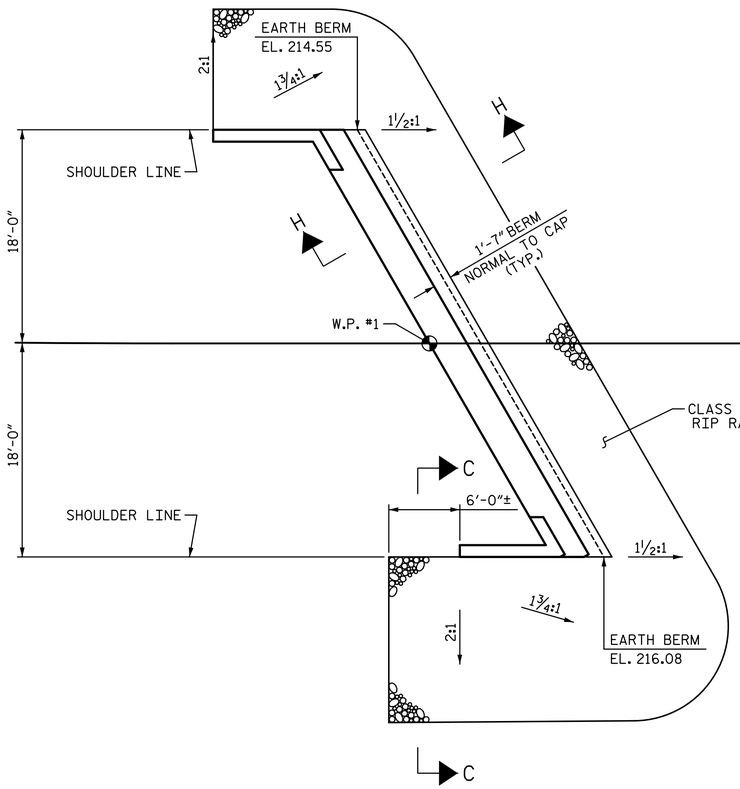

@ END BENT 1

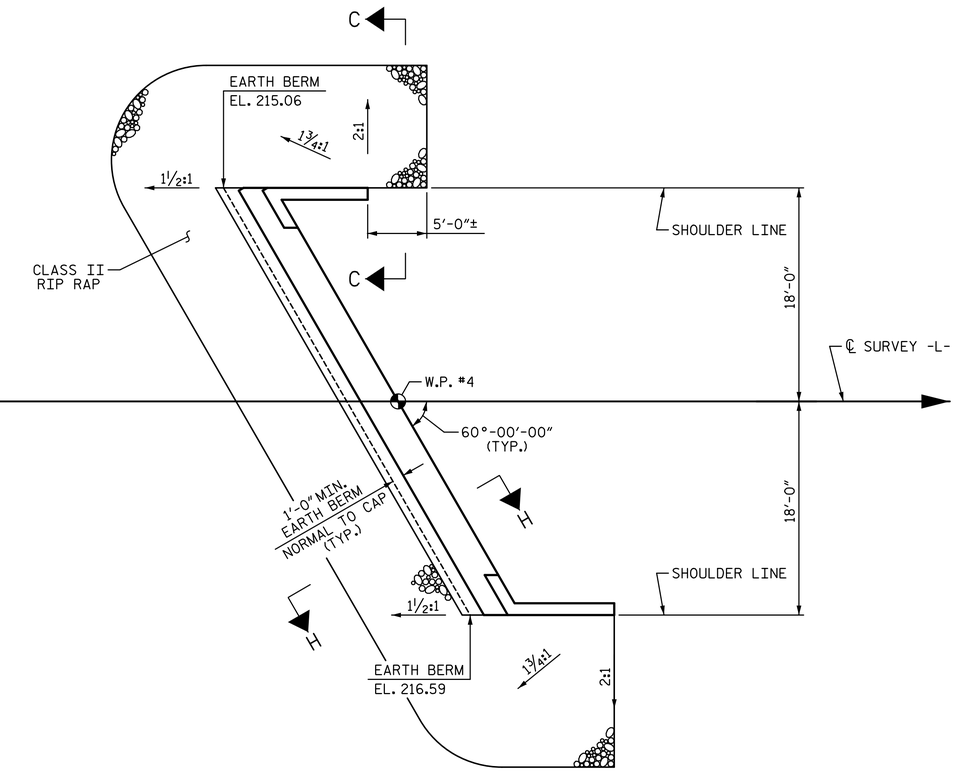

@ END BENT 2

PLAN OF RIP RAP

ESTIMATED QUANTITIES		
BRIDGE @ STA. 14+96.00 -L-	RIP RAP CLASS II (2'-0" THICK)	GEOTEXTILE FOR DRAINAGE
	TONS	SQUARE YARDS
END BENT 1	125	140
END BENT 2	130	145

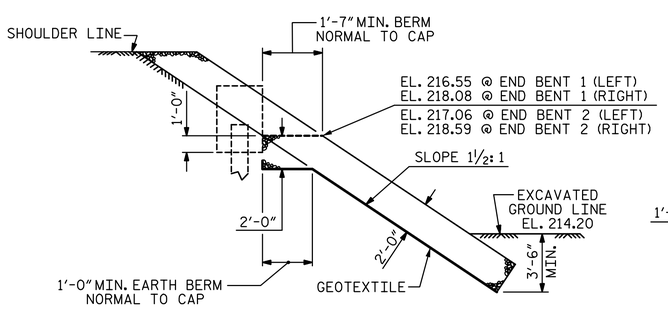

SECTION H-H

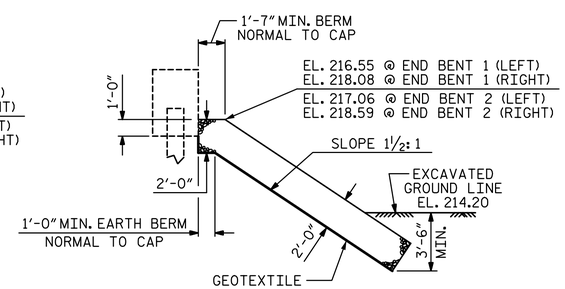

℄ SECTION
BERM RIP RAPPED

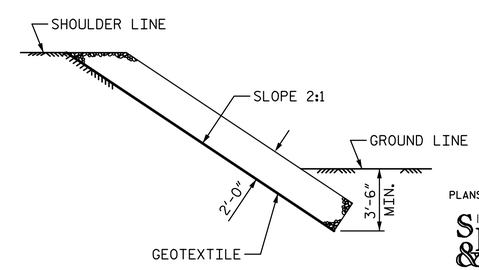

SECTION C-C

PROJECT NO. B-5687
WARREN COUNTY
STATION: 14+96.00 -L-

STATE OF NORTH CAROLINA
DEPARTMENT OF TRANSPORTATION
RALEIGH

RIP RAP DETAILS

PLANS PREPARED BY:
SIMPSON ENGINEERS & ASSOCIATES
5640 Dillard Drive
Suite 200
Cary, NC 27518
(919) 852-0468
(919) 852-0598 (Fax)
www.simpsonengr.com
LICENSURE NO. C-2521

NORTH CAROLINA PROFESSIONAL SEAL 11268 ENGINEER BETSY S. COX
4/3/2018

DRAWN BY: S.D. COOPER DATE: 4-18
CHECKED BY: B.S. COX DATE: 4-18
DESIGN ENGINEER OF RECORD: B.S. COX DATE: 4-18

DOCUMENT NOT CONSIDERED FINAL
UNLESS ALL SIGNATURES COMPLETED

REVISIONS						SHEET NO.
NO.	BY:	DATE:	NO.	BY:	DATE:	S-24
1			3			TOTAL SHEETS
2			4			24