DocuSign Envelope ID: 989A4F13-5092-4276-BA0A-E7803156DE95

PROJECT REFERENCE NO.	SHEET NO.
B-5687 - WARREN 43	2C-2
DOCUMENT NOT CONSIDERED FINAL UNLESS ALL SIGNATURES COMPLETED	

STATE OF
NORTH CAROLINA
DEPT. OF TRANSPORTATION
DIVISION OF HIGHWAYS
RALEIGH, N.C.

ROADWAY DETAIL DRAWING FOR
GUARDRAIL INSTALLATION

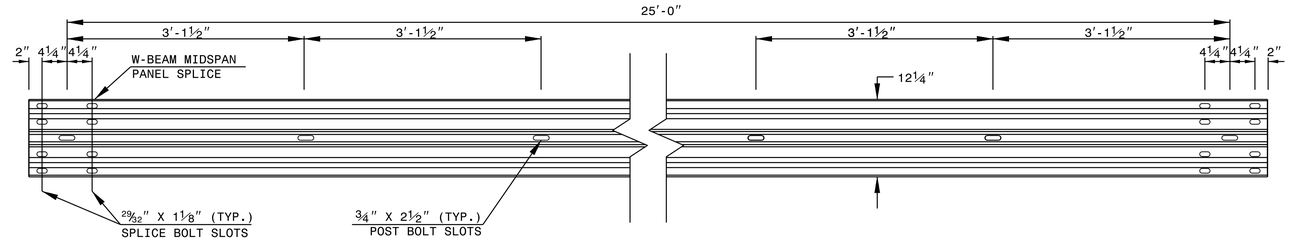

STANDARD W-BEAM GUARDRAIL

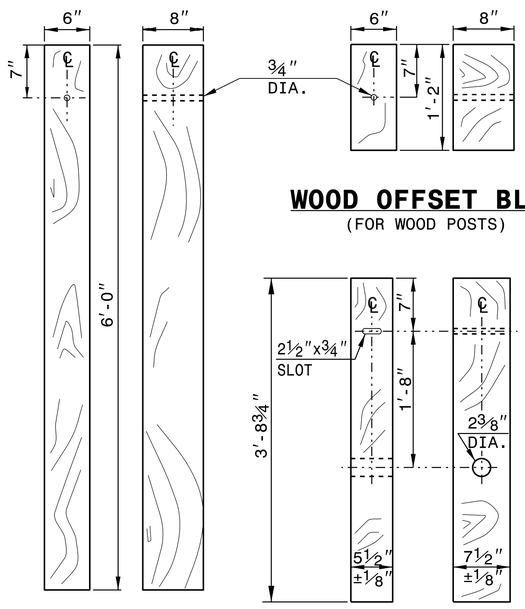

STANDARD LINE POST

SHORT WOOD BREAKAWAY POST

WOOD OFFSET BLOCK

(FOR WOOD POSTS)

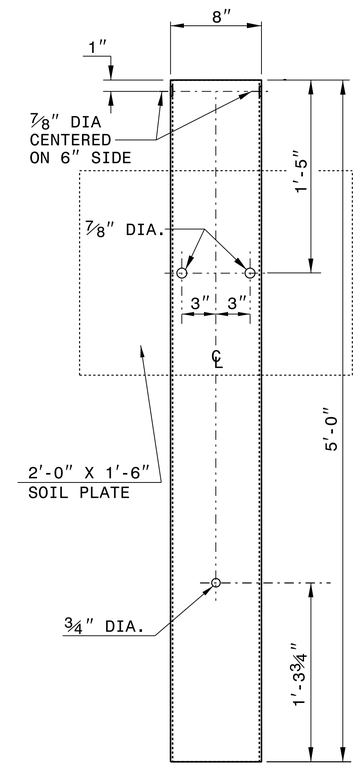

STEEL TUBE

TS 6"x8"x0.1875"

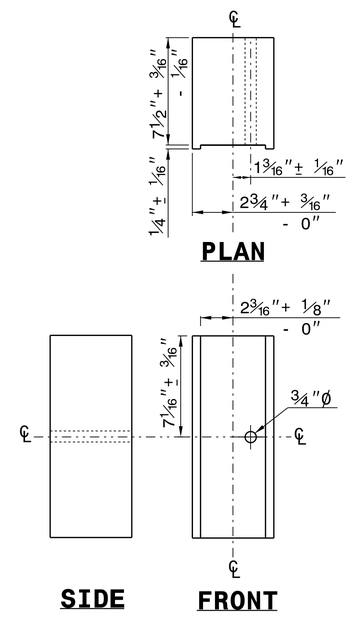

ROUTED OFFSET BLOCK

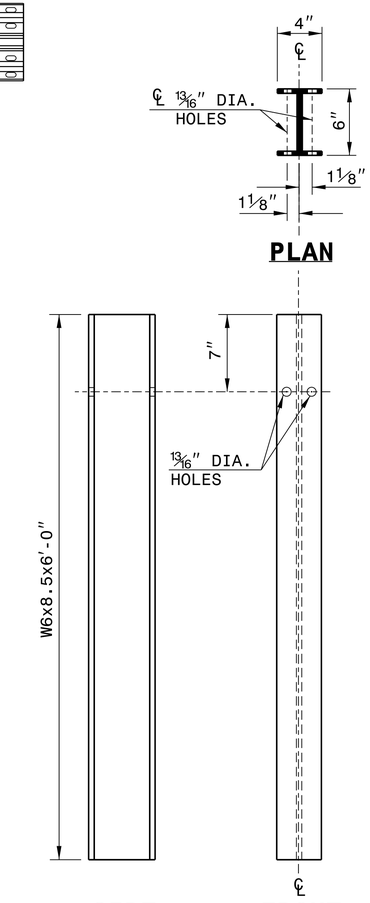

"W6" STEEL POST

SYSTEM PARTS

SHEET 6 OF 8
862D02

STATE OF
NORTH CAROLINA
DEPT. OF TRANSPORTATION
DIVISION OF HIGHWAYS
RALEIGH, N.C.

ROADWAY DETAIL DRAWING FOR
GUARDRAIL INSTALLATION

SHEET 6 OF 8
862D02

SEAL 022966 NORTH CAROLINA PROFESSIONAL ENGINEER JOEL S. HOWERTON

DocuSigned by: Joel S. Howerton 4/6/2018
873F3D17DCDC45F...

CONTRACTS STANDARDS AND DEVELOPMENT UNIT
Office 919-707-6950 FAX 919-250-4119

SEE TITLE BLOCK

ORIGINAL BY: J.HOWERTON DATE: 3-7-2018
MODIFIED BY: DATE:
CHECKED BY: DATE:
FILE SPEC.: