DocuSign Envelope ID: F20DA70D-AC83-4BF5-AE9D-2BD4C4EF895E

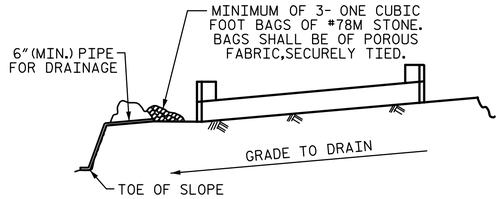


BAGGED STONE AND PIPE SHALL BE PLACED IMMEDIATELY AFTER COMPLETION OF END BENT EXCAVATION. PIPE MAY BE EITHER CONCRETE, CORRUGATED STEEL, CORRUGATED ALUMINUM ALLOY, OR CORRUGATED PLASTIC. PERFORATED PIPE WILL NOT BE ALLOWED.

BAGGED STONE SHALL REMAIN IN PLACE UNTIL THE ENGINEER DIRECTS THAT IT BE REMOVED. THE CONTRACTOR SHALL REMOVE AND DISPOSE OF SILT ACCUMULATIONS AT BAGGED STONE WHEN SO DIRECTED BY THE ENGINEER. BAGS SHALL BE REMOVED AND REPLACED WHENEVER THE ENGINEER DETERMINES THAT THEY HAVE DETERIORATED AND LOST THEIR EFFECTIVENESS.

NO SEPARATE PAYMENT WILL BE MADE FOR THIS WORK AND THE ENTIRE COST OF THIS WORK SHALL BE INCLUDED IN THE UNIT CONTRACT PRICE BID FOR THE SEVERAL PAY ITEMS.

## TEMPORARY DRAINAGE AT END BENT

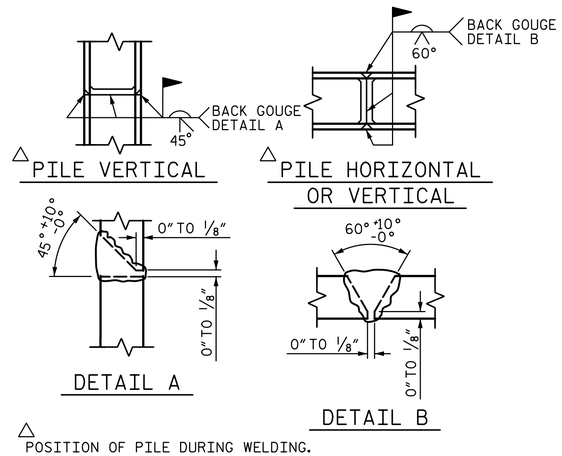


△POSITION OF PILE DURING WELDING.

## PILE SPLICE DETAILS

## BAR TYPES

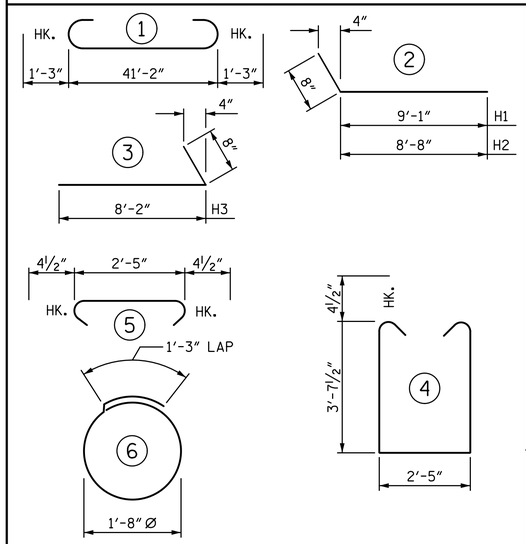


ALL BAR DIMENSIONS ARE OUT TO OUT.

## BILL OF MATERIAL
### FOR ONE END BENT

| BAR | NO. | SIZE | TYPE | LENGTH | WEIGHT |
|---|---|---|---|---|---|
| B1 | 8 | #9 | 1 | 43'-8" | 1188 |
| B2 | 28 | #4 | STR | 21'-11" | 410 |
| B3 | 11 | #4 | STR | 2'-5" | 18 |
| D1 | 20 | #6 | STR | 1'-6" | 45 |
| H1 | 10 | #4 | 2 | 9'-9" | 65 |
| H2 | 10 | #4 | 2 | 9'-4" | 62 |
| H3 | 20 | #4 | 3 | 8'-10" | 118 |
| K1 | 16 | #4 | STR | 3'-3" | 35 |
| S1 | 54 | #4 | 4 | 10'-5" | 376 |
| S2 | 54 | #4 | 5 | 3'-2" | 114 |
| S3 | 20 | #4 | 6 | 6'-6" | 87 |
| V1 | 53 | #4 | STR | 6'-2" | 218 |

REINFORCING STEEL (FOR ONE END BENT) 2736 LB

CLASS A CONCRETE BREAKDOWN (FOR ONE END BENT)

POUR 1 CAP, LOWER PART OF WINGS & COLLARS 20.2 CY

POUR 2 UPPER PART OF WINGS 2.2 CY

TOTAL CLASS A CONCRETE 22.4 CY

END BENT 1
HP 12 X 53 STEEL PILES
NO: 5 LF = 125

PILE DRIVING EQUIPMENT SETUP
HP 12 X 53 STEEL PILES EA: 5

END BENT 2
HP 12 X 53 STEEL PILES
NO: 5 LF = 100

PILE DRIVING EQUIPMENT SETUP
HP 12 X 53 STEEL PILES EA: 5

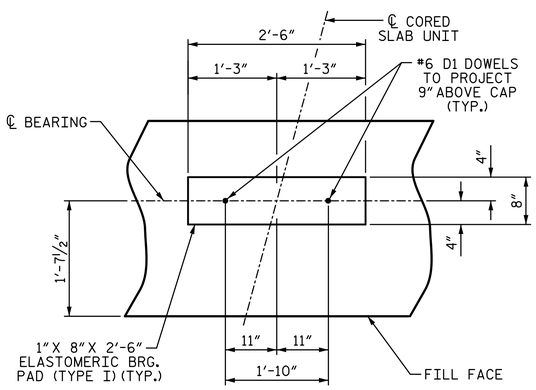


## DETAIL "A"

(END BENT 1 SHOWN, END BENT 2 SIMILAR BY ROTATION)

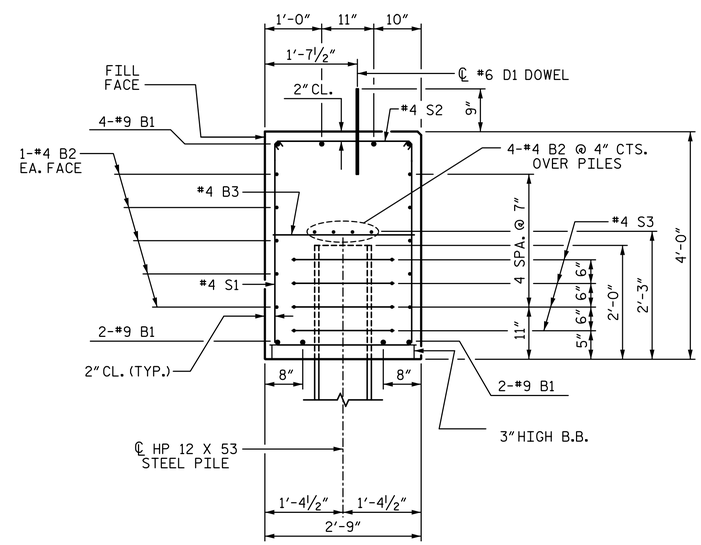


## SECTION A-A

(CONCRETE COLLAR NOT SHOWN FOR CLARITY.
SEE "CORROSION PROTECTION FOR STEEL PILES DETAIL.")

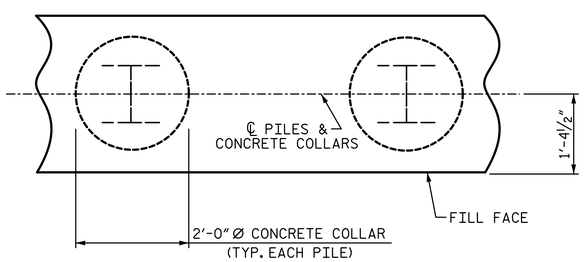


## PLAN

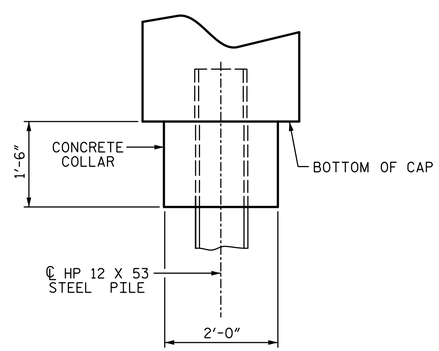


## ELEVATION

## CORROSION PROTECTION FOR STEEL PILES DETAIL

(END BENT 1 SHOWN, END BENT 2 SIMILAR BY ROTATION)

PROJECT NO. B-5687
WARREN COUNTY
STATION: 14+96.00 -L-

SHEET 4 OF 4

STATE OF NORTH CAROLINA
DEPARTMENT OF TRANSPORTATION
RALEIGH

SUBSTRUCTURE

END BENT 1 & 2 DETAILS

PLANS PREPARED BY:
SIMPSON ENGINEERS & ASSOCIATES
5640 Dillard Drive
Suite 200
Cary, NC 27518
(919) 852-0468
(919) 852-0598 (Fax)
www.simpsonengr.com
LICENSURE NO. C-2521

NORTH CAROLINA PROFESSIONAL SEAL 11268 ENGINEER BETSY S. COX
4/3/2018

DOCUMENT NOT CONSIDERED FINAL UNLESS ALL SIGNATURES COMPLETED

| REVISIONS | | | | | | | SHEET NO. |
|---|---|---|---|---|---|---|---|
| NO. | BY: | DATE: | NO. | BY: | DATE: | | S-17 |
| 1 | | | 3 | | | | TOTAL SHEETS |
| 2 | | | 4 | | | | 24 |

DRAWN BY: S.D. COOPER DATE: 4-18
CHECKED BY: B.S. COX DATE: 4-18
DESIGN ENGINEER OF RECORD: B.S. COX DATE: 4-18

4/3/2018 2:03:54 PM G:\Projects\2016\Division 5 (Mott Macdonald)\B-5687 Warren #43 (60 212421CS VCBR)\Structures\Drawings\Final\401_B5687_SMU_eb.dgn